UNIVERSITY OF CAMBRIDGE INTERNATIONAL EXAMINATIONS
International General Certificate of Secondary Education

CANDIDATE NAME	

CENTRE NUMBER						CANDIDATE NUMBER					

PHYSICS **0625/21**

Paper 2 Core **May/June 2011**

1 hour 15 minutes

Candidates answer on the Question Paper.

No Additional Materials are required.

READ THESE INSTRUCTIONS FIRST

Write your Centre number, candidate number and name on all the work you hand in.
Write in dark blue or black pen.
You may use a pencil for any diagrams, graphs or rough working.
Do not use staples, paper clips, highlighters, glue or correction fluid.
DO **NOT** WRITE IN ANY BARCODES.

Answer **all** questions.
You may lose marks if you do not show your working or if you do not use appropriate units.
Take the weight of 1 kg to be 10 N (i.e. acceleration of free fall = 10 m / s^2).

At the end of the examination, fasten all your work securely together.
The number of marks is given in brackets [ ] at the end of each question or part question.

This document consists of **19** printed pages and **1** blank page.

DC (NH/DJ) 28876/6
© UCLES 2011

UNIVERSITY of CAMBRIDGE International Examinations

[Turn over

www.root19.com +91 - 9969 353 391

1 Fig. 1.1 shows a measuring cylinder containing water.

Fig. 1.2 shows the same measuring cylinder after stone A has been lowered into it on a fine string.

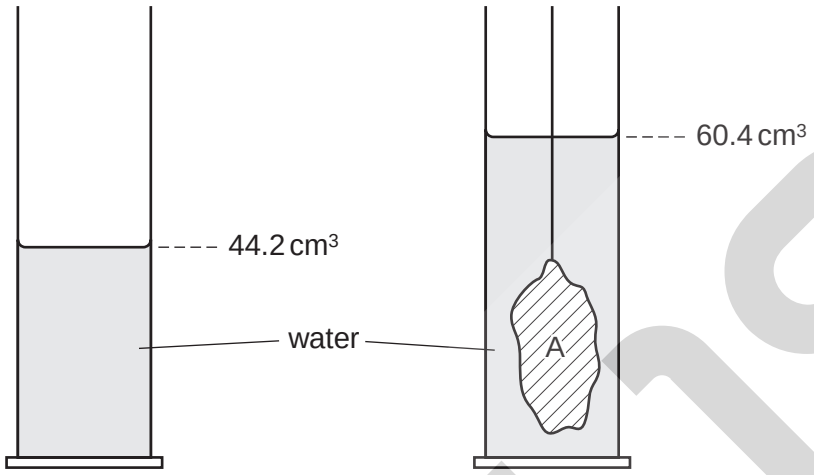

Fig. 1.1 **Fig. 1.2**

(a) Calculate the volume of stone A.

volume = ... cm^3 [2]

(b) The mass of stone A is measured as 40.5 g.

Calculate the density of the rock from which stone A was formed.

density = ... [4]

www.root19.com +91 - 9969 353 391

(c) Stone B, from the same rock as stone A, has a larger volume.

Stone A is removed from the water and replaced by stone B. The measurements are then repeated.

Which of the values in the experiment will be different when using stone B?

Tick boxes alongside any of the quantities that will have changed.

60.4 cm^3	☐
40.5 g	☐
density	☐

[2]

[Total: 8]

© UCLES 2011
www.root19.com

+91 - 9969 353 301

2 A fixed amount of dry gas is exerting a pressure on its container.

(a) In terms of molecules, explain what causes the pressure.

.....

.....

.....

.....[3]

(b) One of the sketch graphs in Fig. 2.1 shows how the pressure of the gas varies with volume at constant temperature, and the other shows how the pressure varies with temperature at constant volume.

The pressure axis has been labelled in each case.

Fig. 2.1

(i) On the appropriate graphs, label one horizontal axis "volume / m^3" and the other horizontal axis "temperature / °C".

(ii) On one of the graphs, mark, with the letter X, the pressure of the gas at the ice point.

[2]

[Total: 5]

© UCLES 2011
www.root19.com

+91 - 9969 353 391

3 Electricity can be generated from either renewable or non-renewable energy sources.

(a) Describe the difference between a renewable energy source and a non-renewable energy source.

.....

.....

.....

.....[1]

(b) **(i)** Name one renewable energy source.

.....

(ii) Suggest one reason why your choice in **(b)(i)** is not, so far, widely used for generating electricity.

.....

.....[2]

(c) **(i)** Name one non-renewable energy source.

.....

(ii) Suggest one reason why non-renewable sources have been widely used for generating electricity up until the present time.

.....

.....[2]

[Total: 5]

© UCLES 2011
www.root19.com

+91 - 9969 353 301

4 The main parts of a cold store are shown in Fig. 4.1.

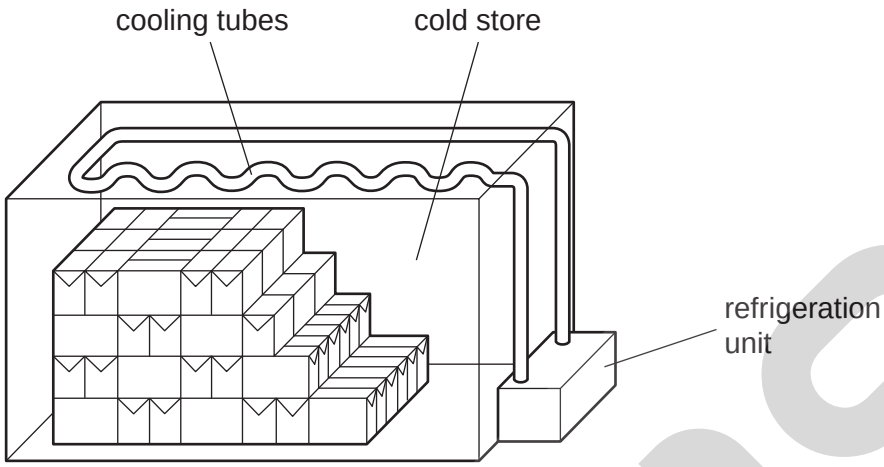

Fig. 4.1

(a) Explain why the cooling tubes are positioned at the top of the store.

.....

.....

.....

.....[1]

(b) Suggest why the refrigeration unit is outside the cold store.

.....

.....

.....

.....[2]

(c) The walls are made of thick thermally-insulating material.

Why is it important to have the walls made like this?

.....

.....

.....

.....[2]

www.root19.com +91 - 9969 353 391

(d) Even when the refrigeration unit is running continuously, there comes a time when the temperature in the store stops falling, and remains constant.

Explain why this happens.

.....

.....

.....

.....[2]

[Total: 7]

© UCLES 2011
www.root19.com

+91 - 9969 353 301

5 **(a)** The four words below can each be used to describe waves.

Put a tick in each of the boxes alongside any words that can be applied to sound waves.

longitudinal	☐
transverse	☐
electromagnetic	☐
mechanical	☐

[2]

(b) How does an *echo* occur?

.....

.....[1]

(c) Fig. 5.1 shows a boat steaming along a river. The river is in a wide gorge and there are high cliffs on each side.

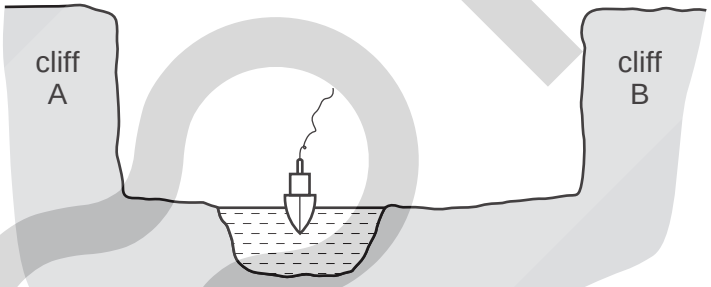

Fig. 5.1

The boat sounds its hooter once. Two clear echoes are heard by a person on the boat.

The first echo is 1.5 s after the hooter sounds. The second echo is 2.5 s after the hooter sounds.

(i) Which cliff caused the first echo? .....[1]

(ii) Sound travels at 330 m / s in air.

Calculate the distance between the two cliffs.

distance = ... m [3]

www.root19.com +91 - 9969 353 391

(iii) Further along the river, the cliffs are the same distance apart but the river is midway between the cliffs. The boat sounds its hooter again.

Without further calculation, describe what is now heard and approximately when it is heard.

what is heard .....

.....

when .....

.....[2]

[Total: 9]

© UCLES 2011

www.root19.com
+91 - 9969 353 301

6 A laser is a device that gives a narrow parallel beam of monochromatic (single-colour) light.

Fig. 6.1 shows the light from a laser shining on a triangular glass prism.

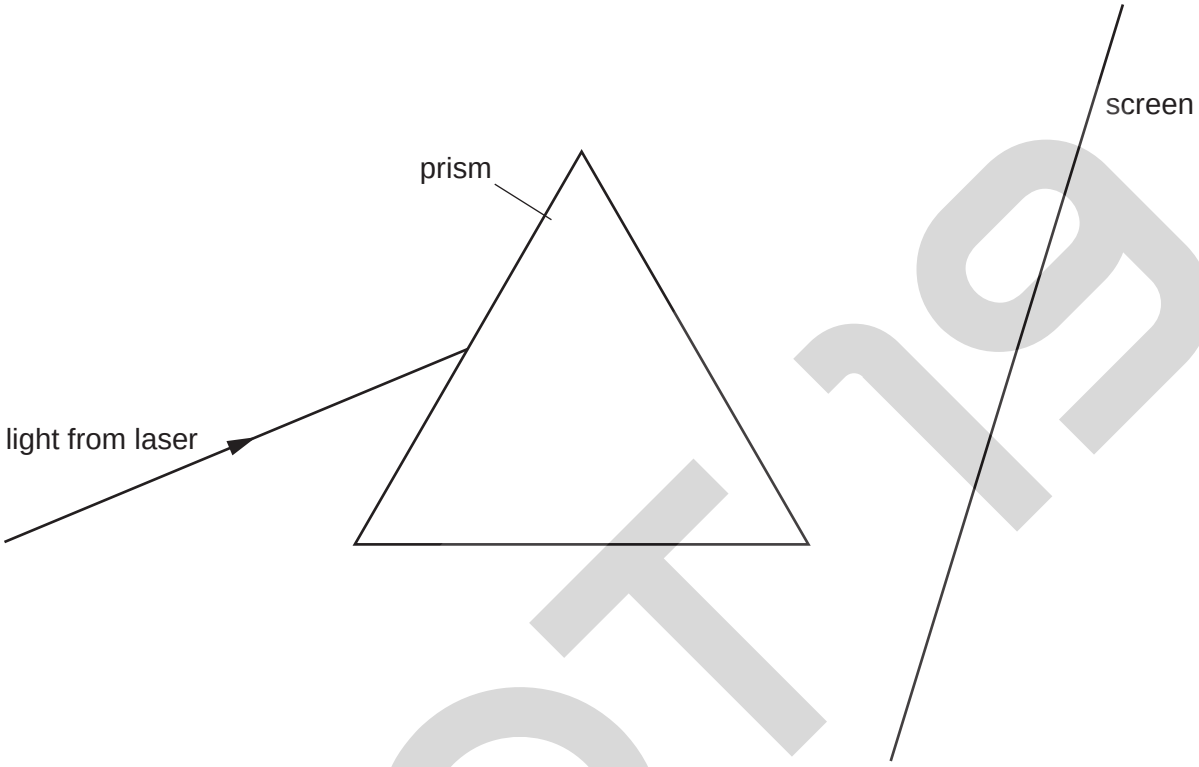

Fig. 6.1

(a) On Fig. 6.1, complete the path of the light until it reaches the screen. [2]

(b) What will be seen on the screen?

.....[1]

(c) The beam of light from the laser is replaced by a beam of white light from a lamp.

State what is now seen on the screen.

.....

.....[2]

[Total: 5]

www.root19.com +91 - 9969 353 391

7 **(a)** Two light, identical spheres, A and B, are suspended alongside each other on thin nylon threads, as shown in Fig. 7.1.

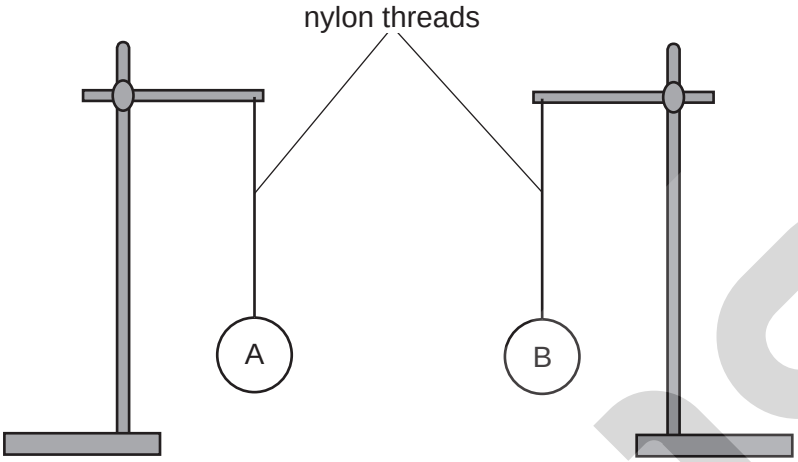

Fig. 7.1

A is given a positive charge and B is given a negative charge.

On Fig. 7.1, draw how the threads and spheres might look after the spheres have been charged. [1]

(b) A cleaner is attempting to remove dust from some plastic-covered furniture, using a dry cloth. Unfortunately, this seems to make the dust cling more firmly to the plastic covering.

(i) Suggest why this happens.

.....

.....

.....

.....[3]

(ii) Suggest why this would be less likely to happen if the cleaner used a cloth which was very slightly damp.

.....

.....

.....

.....[2]

[Total: 6]

© UCLES 2011
www.root19.com

+91 - 9969 353 301

8 Fig. 8.1 shows two resistors forming part of a circuit.

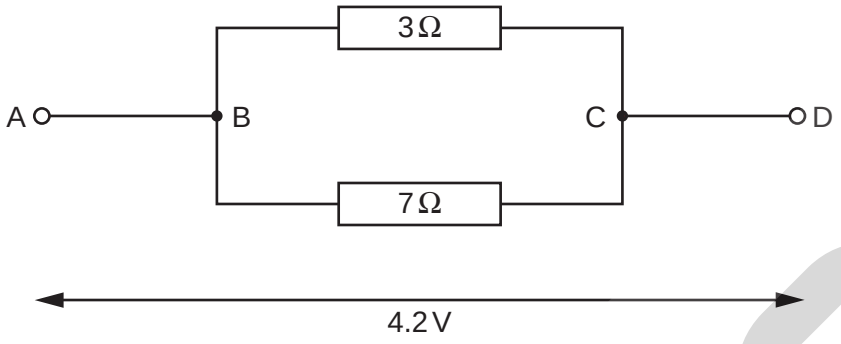

Fig. 8.1

(a) **(i)** Complete the following sentence about the two resistors connected between A and D.

The two resistors are connected in ..... . [1]

(ii) The potential difference between A and D is 4.2V.

State the value of the potential difference between B and C.

potential difference = ...V [1]

(iii) Calculate the current in the 3Ω resistor.

current = ...[4]

(iv) State how the current in AB compares with

1. the current in each of the two resistors,

.....

2. the current in CD.

.....[2]

www.root19.com +91 - 9969 353 391

(b) In the boxes below, draw two circuit diagrams, each containing a battery and three identical resistors. Arrange each circuit so that all the resistors in the circuit carry the same current.

Draw one circuit in each box.

[2]

[Total: 10]

© UCLES 2011
www.root19.com

+91 - 9969 353 301

9 **(a)** A car headlamp circuit consists of a 12 V battery, a switch, two 12 V headlamps and a 12 V indicator lamp (inside the car).

Fig. 9.1 shows the symbols of these components.

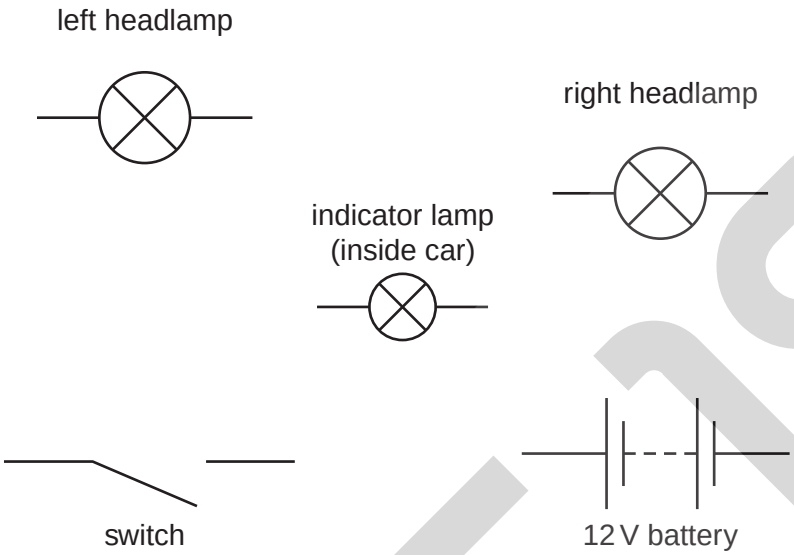

Fig. 9.1

Complete Fig. 9.1 to show the wiring necessary so that all three lamps light up at full brightness when the switch is closed. [2]

(b) **(i)** Explain briefly, in terms of molecules, why solids expand when heated.

.....

.....

.....[1]

www.root19.com +91 - 9969 353 391

(ii) Brass expands when heated.

Invar is a metal that expands very little when heated.

The flasher lamp shown in Fig. 9.2 is used as a warning lamp in a car.

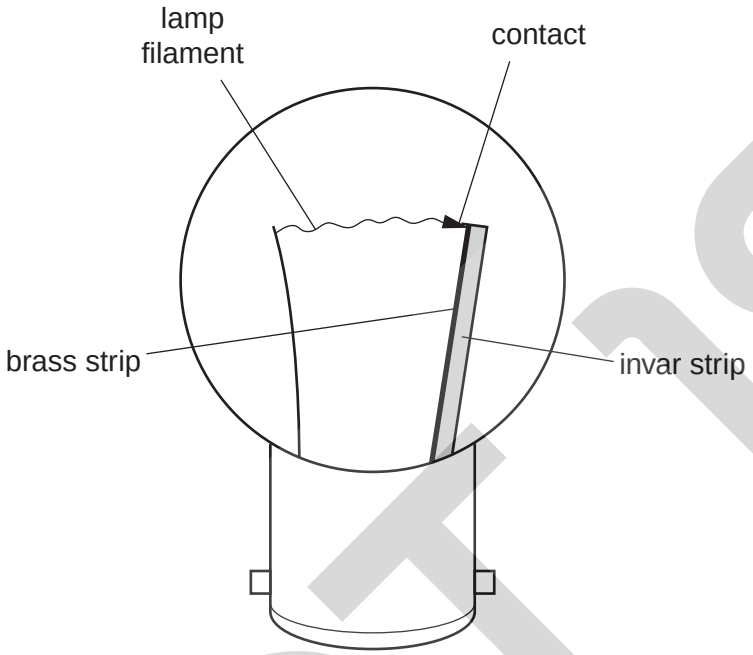

Fig. 9.2

The flasher lamp is designed to flash on and off repeatedly.

It contains a bimetallic strip made of a brass strip and an invar strip joined together along their lengths.

1. State what happens to the bimetallic strip when it is heated.

.....[2]

2. Explain why the lamp flashes on and off repeatedly when it is connected to an appropriate battery.

.....

.....

.....

.....

.....[4]

[Total: 9]

www.root19.com +91 - 9969 3[illegible]

10 A rotating-coil generator consists of a rectangular coil of wire that rotates at constant speed between the poles of a permanent magnet.

Figs. 10.1, 10.2 and 10.3 show views from one end of the coil, when the coil is in different positions.

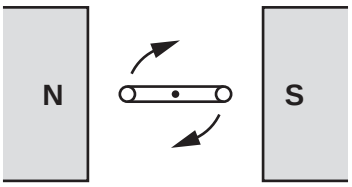

Fig. 10.1

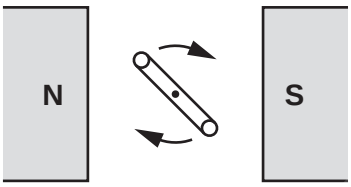

Fig. 10.2

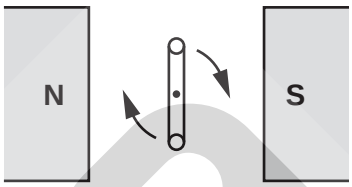

Fig. 10.3

(a) Which diagram shows the coil in the position where

(i) the induced e.m.f. in the coil is at its maximum, ...

(ii) the induced e.m.f. in the coil is zero? ..... [2]

(b) On Fig. 10.4, sketch the graph of e.m.f. against time, for two complete rotations of the coil.

Fig. 10.4

[4]

[Total: 6]

www.root19.com +91 - 9969 353 391

11 Fig. 11.1 shows a cathode-ray tube connected to external voltage supplies and switches. The terminals labelled H.T. are connected to a high voltage source.

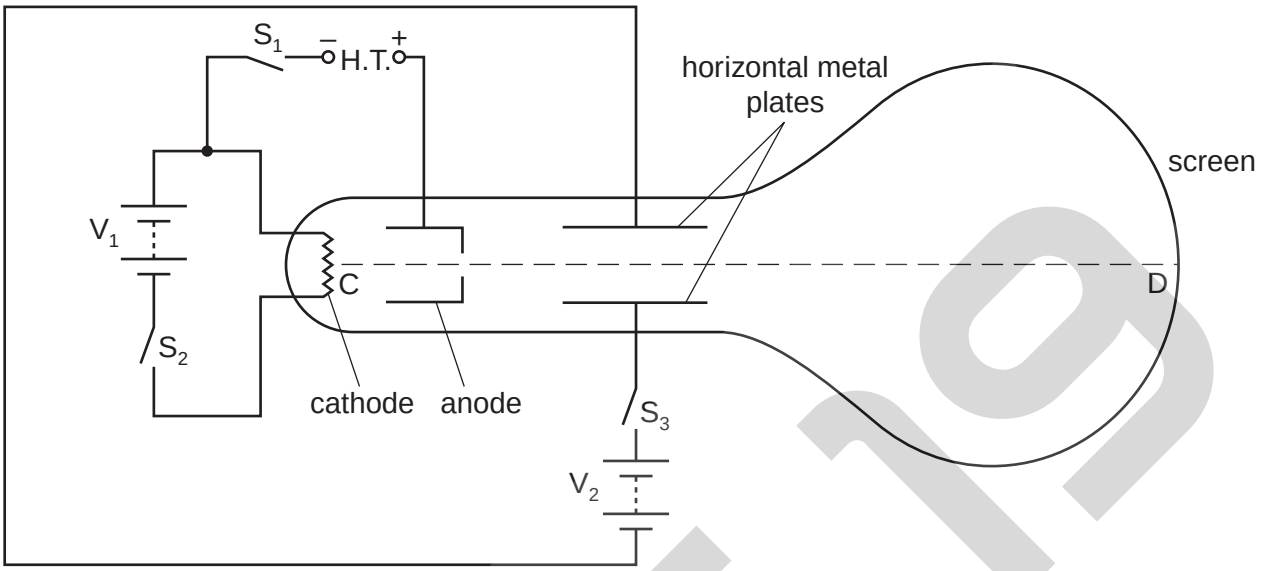

Fig. 11.1

(a) When the cathode becomes hot it releases electrons.

What name is used to describe the release of electrons by heating?

.....[1]

(b) **(i)** Which switch should be closed to make the cathode become hot?

switch = ...

(ii) Which switch should then be closed to obtain a beam of electrons along CD?

switch = ...

(iii) Which switch should then be closed to deflect the beam of electrons downwards?

switch = ...[2]

(c) What must be done in order to deflect the beam of electrons upwards, instead of downwards?

.....

.....

.....[1]

[Total: 4]

© UCLES 2011
www.root19.com

+91 - 9969 353 301

12 **(a)** Complete the following definition of radioactive half-life.

The half-life of a radioactive substance is the time taken for .....

.....

.....

.....[2]

(b) Fig. 12.1 shows how the count rate from a sample of radioactive material changes with time.

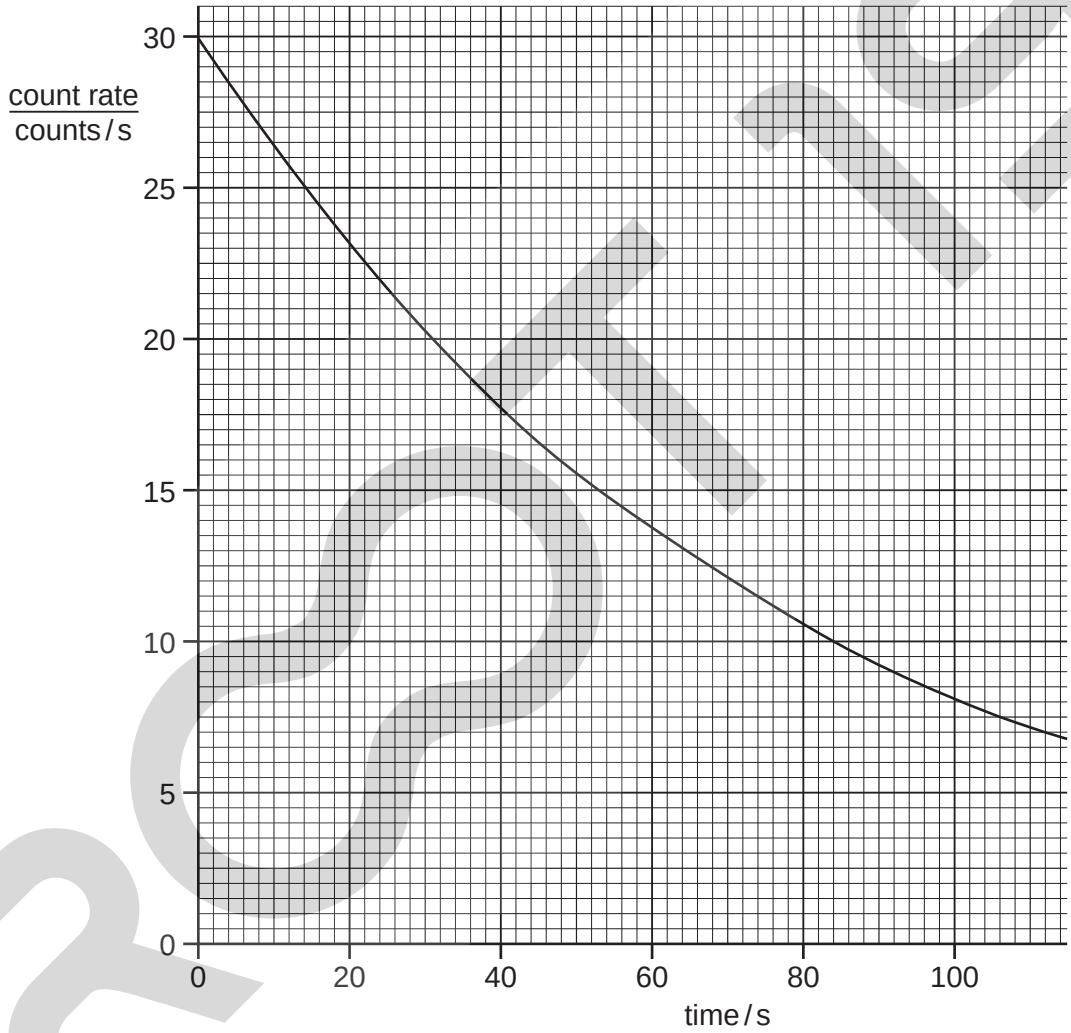

Fig. 12.1

www.root19.com +91 - 9969 353 391

(i) Use Fig. 12.1 to find the half-life of the radioactive material.

half-life = ... s [1]

(ii) Use the graph to find how long it takes for the count rate to decrease from 30 counts / s to 10 counts / s.

time taken = ... s [1]

(iii) Use your answers to **(i)** and **(ii)** to find how long it takes for the count rate to decrease from 30 counts / s to 5 counts / s.

time taken = ... s [2]

[Total: 6]

© UCLES 2011
www.root19.com

+91 - 9969 353 391

BLANK PAGE

Permission to reproduce items where third-party owned material protected by copyright is included has been sought and cleared where possible. Every reasonable effort has been made by the publisher (UCLES) to trace copyright holders, but if any items requiring clearance have unwittingly been included, the publisher will be pleased to make amends at the earliest possible opportunity.

University of Cambridge International Examinations is part of the Cambridge Assessment Group. Cambridge Assessment is the brand name of University of Cambridge Local Examinations Syndicate (UCLES), which is itself a department of the University of Cambridge.

www.root19.com +91 - 9969 353 391